Lateral Stability of Long Prestressed Concrete Beams

Part 1

by

Robert F. Mast
Chairman of the Board
ABAM Engineers
A Member of the Berger Group
Federal Way, Washington

As the span of prestressed concrete beams has been growing over the years, lateral stability during handling and shipping has become increasingly important. Many designers only consider lateral stability of the finished structure, which is seldom a problem once the beam is integrated with a floor or deck. The problems of stability during construction are left to the fabricators and contractors.

The lateral buckling formulas in most textbooks are not adequate to deal with the special cases of a beam suspended on cables or a beam on "springy" supports. This paper deals with these special cases and provides the background and derivations of the proposed formulas.

The material is prepared in two parts. Part 1 deals with the lateral bending stability of beams when suspended from lifting loops. This method was first developed by the author in 1963 and was the basis of the PCI Design Handbook[1] provisions for lateral stability during lifting, although it appears in modified form in the Handbook.

Part 2 extends the analysis of lateral bending stability to the more general case of beams whose supports provide elastic restraint to rolling. This includes beams supported on elastomeric pads and on trucks and trailers, and includes the effects of superelevation.

Synopsis

A theory for the lateral bending stability of prestressed concrete girders free to roll at the supports is presented. The factor of safety is dependent on the height of the roll axis, the initial lateral eccentricity, the lateral stiffness, and the maximum permissible tilt angle of the beam. The theory is compared to the PCI Design Handbook and to field experience. Methods for improving the lateral stability of long beams are discussed. A numerical example is included to demonstrate the proposed method. A simple computer program is furnished to solve more general cases. Derivations of some of the major equations are given in an Appendix.

* * *

CONCLUSIONS

1. When a beam hangs from lifting points, it may roll about an axis through the lifting points.
2. The stability and safety of a hanging beam are dependent on four quantities:

   e_i = initial lateral eccentricity of the center of gravity of the beam with respect to the roll axis

   y_r = height of the roll axis above the center of gravity of the beam

   $\overline{z}_o$ = theoretical lateral deflection of the center of gravity of the beam, computed with the full dead weight applied laterally

   θ_{max} = maximum permissible tilt angle of the beam

   These quantities may be reduced to two dimensionless ratios, $y_r/\overline{z}_o$ and θ_{max}/θ_i (where $\theta_i = e_i/y_r$, the initial roll angle of a rigid beam).
3. The net factor of safety of a hanging beam, after accounting for initial imperfections, is the lesser factor of safety calculated from the following two equations:

$$\mathrm{FS} = \frac{y_r}{\overline{z}_o}\left(1 - \frac{\theta_i}{\theta_{max}}\right) \tag{1}$$

$$\mathrm{FS} = \frac{\theta_{max}}{\theta_i}\left(1 - \frac{\overline{z}_o}{y_r}\right) \tag{2}$$

4. Eq. (5.2.3) of the PCI Design Handbook is a reasonably conservative approximation of Eq. (1).
5. Several methods are available for improving the lateral stability of hanging beams. The most common and effective method is to move the lifting point in from the end by a small amount.

BACKGROUND

Classic studies of lateral buckling of beams are reported in Timoshenko[2] and Roark.[3] These analyses are based on the assumption that the beams are rigidly restrained from rotation at the supports. Buckling is caused by the middle part of the span twisting relative to the support, creating a sideways deflection. This type of buckling is important in steel I-beams, which have low torsional stiffness.

The torsional stiffness of an I-beam varies as the cube of the thickness of the web and flanges. Concrete I-beams, with relatively thick webs and flanges, are 100 to 1000 times stiffer in torsion than steel I-beams. As a result, lateral buckling of the type described by Timoshenko is seldom critical in a concrete beam. But, when the supports have roll

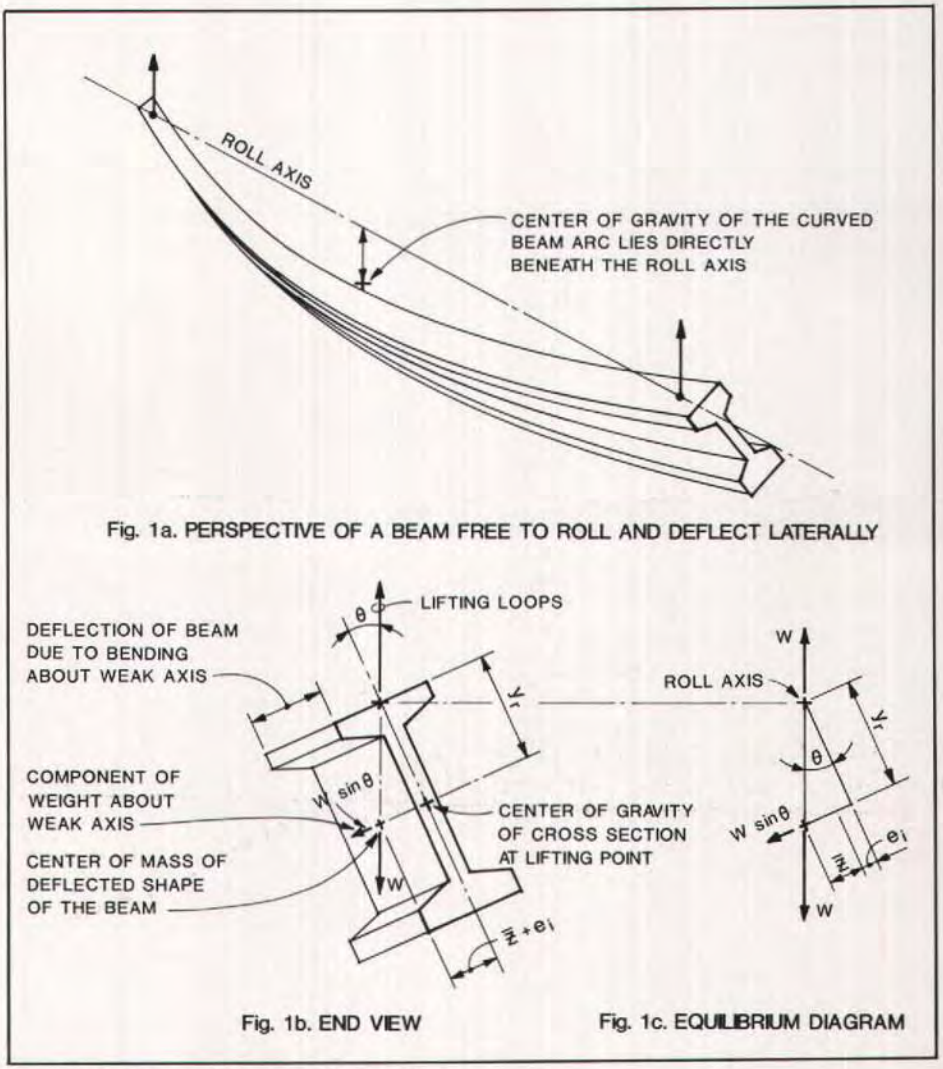

Fig. 1. Equilibrium of beam in tilted position.

flexibility, the beam may roll sideways, producing lateral bending of the beam.

This is the cause of most lateral stability problems of long concrete I-beams. Muller[4] gave solutions for the critical buckling load of beams on supports that have roll flexibility. A similar approach is given by Libby.[5] Swann and Godden[6] showed how numerical integration may be applied to find the buckling load of beams on elastic supports.

The approaches given in Refs. 4 through 6 may be greatly simplified by assuming the beam to be rigid in torsion. For concrete I-beams with webs and flanges 6 in. (150 mm) or more in thickness, the torsional stiffness of the beams will normally be much greater than the roll stiffness of the supports when the beam is hanging (see Appendix E). The assumptions of torsional rigidity for the beam transforms the problem from a buckling problem to a simple bending and equilibrium problem.

BASIC THEORY OF ROLL EQUILIBRIUM

When a beam hangs from flexible supports such as lifting loops, it is free to roll. The center of rotation is the point at which the flexible support joins the rigid body. This is normally at the top surface of a concrete beam. A line passing through the center of rotation (roll center) at each support forms a roll axis.

If the beam were perfect, it would hang in a plumb position, with the center of gravity of the beam directly beneath the roll axis. But, sweep tolerances and lifting loop placement tolerances always cause the center of gravity of the beam to be slightly to one side or the other of the roll axis. This causes the beam to tip about the roll axis by a small angle, θ_i, where:

θ_i = initial roll angle, radians, of a rigid beam

= e_i/y_r [more precisely, $\tan(e_i/y_r)$]

e_i = initial eccentricity of the center of gravity from the roll axis

y_r = distance from the center of gravity to the roll axis, measured along the (original) vertical axis of the beam

The slight tipping of the beam causes a component of the beam weight W to be applied about the weak axis of the beam. This component is $W \sin \theta_i$, and it causes a lateral deflection of a flexible beam, which further shifts the center of gravity of the mass of the beam. This causes an increase in the roll angle θ, which causes further lateral load component and further deflection, etc. Depending on the lateral stiffness of the beam, it may reach equilibrium at a roll angle θ slightly larger than θ_i, or θ may increase to the point where the lateral bending is sufficient to destroy the beam. The lateral stiffness necessary to prevent failure may be computed as follows.

The final equilibrium position of the hanging beam is shown in Fig. 1. The beam is assumed to be uniformly tipped by an angle θ. The component of the dead weight acting about the weak axis, $W \sin \theta$, has caused an additional lateral deflection $\bar{z}$ of the center of gravity of the mass of the now curved beam. To find the equilibrium angle θ, one must find $\bar{z}$, but $\bar{z}$ is determined by the weight component $W \sin \theta$, which is itself dependent on θ.

The problem may be solved by first computing a theoretical deflection $\bar{z}_o$ of the center of gravity of the mass of the beam with the full weight W applied about the weak axis. Then, because the weak axis component of the weight is $W \sin \theta$, $\bar{z}$ may be found from $\bar{z} = \bar{z}_o \sin \theta$.

The midspan deflection of a uniformly loaded simple span beam may be computed by the well-known formula:[1,7]

$$\beta_y = \frac{5}{384} \frac{wl^4}{EI_y} \qquad (5.2.2)$$

where β_y is the weak axis deflection and I_y is the weak axis moment of inertia. But, $\bar{z}_o$ is the distance to the center of gravity of the deflected arc of the beam, not the maximum deflection of the arc;[8]

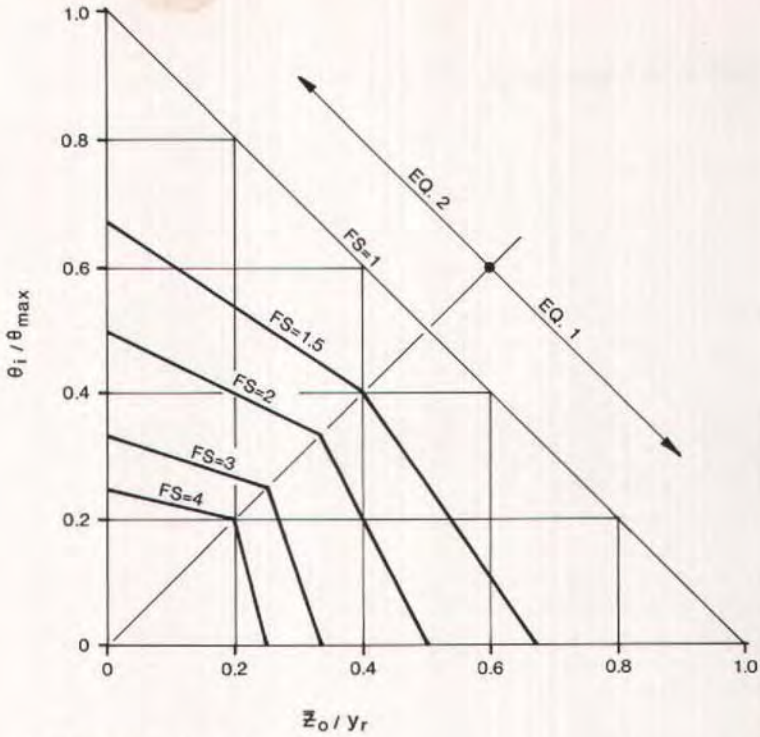

Fig. 2. Factors of safety.

$\bar{z}_o$ is approximately ⅔ of β_y. More precisely:

$$\bar{z}_0 = \frac{1}{120} \frac{wl^4}{EI_y} = 0.64\,\beta_y \qquad (3)$$

The derivation of Eq. (3) is given in Appendix F. Note that the quantity $\bar{z}_o$ is a fictitious quantity because most beams would fail if the full weight were applied laterally. But, $\bar{z}_o$ is used to compute the smaller quantity, $\bar{z} = \bar{z}_o \sin\theta$.

The equilibrium equation (see Fig. 1c) may now be written:

$$\tan\theta = (\bar{z}_o \sin\theta + e_i)/y_r \qquad (4)$$

For a given beam and span, y_r is known, $\bar{z}_o$ may be computed, and e_i may be assumed. The only unknown is θ, which may be found by successive approximations. For most applications, θ is sufficiently small (say 0.2 radian or less) so that the approximation $\theta \approx \sin\theta \approx \tan\theta$ may be used. The equilibrium equation then simplifies to:

$$\theta = \frac{e_i}{y_r - \bar{z}_o} \qquad (5)$$

This may also be written (recalling that $\theta_i = e_i/y_r$):

$$\theta = \theta_i \left(\frac{1}{1 - \bar{z}_o/y_r}\right) \qquad (5a)$$

The quantity $1/(1 - \bar{z}_o/y_r)$ may be thought of as a multiplier that increases the tilt of the beam and is dependent on the lateral elastic properties of the beam. Note that as $\bar{z}_o$ approaches y_r, the denominator approaches zero and the multiplier becomes very large. When $\bar{z}_o$ is equal to y_r, the beam is totally un-

stable even if the initial imperfections are virtually zero, and this represents the limiting (critical) case for lateral buckling stability.

FACTORS OF SAFETY

For stability, the height of the roll center y_r must be greater than $\bar{z}_o$, and the ratio $y_r/\bar{z}_o$ may be thought of as the factor of safety against lateral buckling instability:

$$\text{FS} = \frac{y_r}{\bar{z}_o} \tag{6}$$

Eq. (6) gives the gross factor of safety against total instability for a near perfect beam. Beams with initial imperfections may fail before total instability is reached, as there is a limit on the angle θ that the lateral bending strength of the beam can tolerate. This maximum angle is defined as θ_{max}, and $(y_r/\bar{z}_o)_{critical}$ is defined as the ratio of $y_r/\bar{z}_o$, which makes $\theta = \theta_{max}$. From Eq. (5a):

$$\left(\frac{y_r}{\bar{z}_o}\right)_{critical} = \frac{1}{1 - \theta_i/\theta_{max}} \tag{7}$$

Eq. (7) gives the critical value of the ratio $y_r/\bar{z}_o$, which would cause the tilt angle θ of the beam to be equal to the angle θ_{max}, which would cause failure in lateral bending. The actual ratio of $y_r/\bar{z}_o$ must exceed that given by Eq. (7) by a factor of safety:

$$\text{FS} = \frac{y_r/\bar{z}_o}{(y_r/\bar{z}_o)_{critical}}$$

Substituting Eq. (7) into the above:

$$\text{FS} = \frac{y_r}{\bar{z}_o}\left(1 - \frac{\theta_i}{\theta_{max}}\right) \tag{1}$$

Note that when $e_i = 0$, i.e., no imperfections, $\theta_i = 0$ and Eq. (1) reduces to Eq. (6).

The Eqs. (1) and (6) defining the factor of safety were derived assuming the important parameter to be the lateral elastic properties of the beam represented by $\bar{z}_o$. The effect of θ_i and θ_{max} was taken to be a modifying effect on the basic stability represented by $y_r/\bar{z}_o$ in Eq. (1). The basic stability is represented by $y_r/\bar{z}_o$, but it is reduced by the quantity $(1 - \theta_i/\theta_{max})$, accounting for the effects of initial imperfections.

If the beam is stiff laterally (and thus $\bar{z}_o$ is small), the factor of safety may not be as large as indicated by Eq. (1). Even very stiff beams have a maximum tolerable roll angle θ_{max} beyond which the beam would fail in lateral bending. In this case, the effect of the initial eccentricity would be the dominant effect, and it would be more logical to define the factor of safety as the ratio of θ_{max}/θ. Assume:

$$\text{FS} = \frac{\theta_{max}}{\theta}$$

Substituting Eq. (5a) for θ:

$$\text{FS} = \frac{\theta_{max}}{\theta_i}\left(1 - \frac{\bar{z}_o}{y_r}\right) \tag{2}$$

Eq. (2) is very similar to Eq. (1), but in Eq. (2), θ_{max}/θ_i is the main parameter and the quantity $(1 - \bar{z}_o/y_r)$ is the modifier. Swann[8] gives an equation identical to Eq. (2). The true factor of safety is the lower of that given by Eqs. (1) and (2). These equations give equal factors of safety when $y_r/\bar{z}_o = \theta_{max}/\theta_i$. Fig. 2 shows a plot of Eqs. (1) and (2).

COMPARISON TO PCI DESIGN HANDBOOK

The material presented on p. 5-14 of the PCI Design Handbook, Third Edition, was based on the above considerations, but is presented in a simplified form:

$$\text{FS} = \frac{y_t}{\beta_y} \tag{5.2.3}$$

Eq. (5.2.3) is similar to Eq. (6), but with y_t replacing y_r and β_y replacing $\bar{z}_o$.

Because y_r is approximately equal to y_t, and $\bar{z}_o$ is approximately ⅔ of β_y, Eq. (5.2.3) produces a factor of safety about ⅔ that of Eq. (6). However, Eq. (5.2.3) produces results approximately equivalent to Eq. (1) in a worst case situation, as may be seen by considering a numerical example.

Assume a 120 ft (36.6 m) beam with y_t = 36 in. (914 mm), 3 in. (76 mm) of camber, and β_y = 18 in. (457 mm). By Eq. (5.2.3):

$$FS = \frac{y_t}{\beta_y} = \frac{36}{18} = 2$$

Assume a lifting loop placement tolerance of 1 in. (25.4 mm) and a sweep of ⅛ in./10 ft, or 1.5 in. (38 mm). The maximum value of e_i, measured to the center of gravity of a parabolic arc, is 2 in. (51 mm). Assume the camber is parabolic, so that y_r, the distance from the center of gravity to the roll center, is y_t − 2/3 × camber, or 34 in. (864 mm). The quantity $\bar{z}_o = 0.64\ \beta_y$ or 11.5 in. (292 mm). Assume the roll angle is limited to 0.2 radian at failure, i.e., θ_{max} = 0.2. From Eq. (1):

$$FS = \frac{y_r}{\bar{z}_o}\left(1 - \frac{\theta_i}{\theta_{max}}\right) = \frac{34}{11.5}\left(1 - \frac{2/34}{0.02}\right) = 2.1$$

The above example with e_i = 2 in. (51 mm) represents a worst case situation. For this case, Eq. (5) gives θ = 0.089 radian or 5.1 degrees when the beam is lifted. This excessive tilt would give warning that e_i is excessive.

One normally computes the strength of a member assuming the member to be straight and true. The effect of tolerances is covered by the safety factor. The gross safety factor on a straight and true member, computed from Eq. (6), is:

$$FS = y_r / \bar{z}_o$$

This produces a total safety factor about 1.5 times that given by the PCI Design Handbook; the PCI Design Handbook method has a "hidden" factor of safety of 1.5. Tolerances normally affect the strength of a member by a few percent. The effect of tolerances can be much more drastic in the analysis of lateral bending stability. The hidden factor of safety accounts for this. The effect of tolerances may be evaluated explicitly by the use of Eq. (1).

The values of θ_{max} and θ_i vary from case to case. The above example gives a worst case value for θ_i. The quantity θ_{max} is determined by the lateral bending strength of the beam, which is dependent on the amount of precompression in the top flange. Imper and Laszlo[9] have suggested using temporary post-tensioning in the top flange; this improves θ_{max} and the factor of safety.

EFFECT OF LIFTING POINT LOCATION

Locating the lifting point even a small distance in from the end can dramatically improve the lateral bending stability. Not only is the deflection reduced by approximately the fourth power of the net span, but $\bar{z}_o$ is improved even further, as the weight in the overhanging ends is on the opposite side of the roll axis.

Anderson[7] and Imper and Laszlo[9] show how the midspan deflection is improved as the lifting points are moved in from the end. Fig. 3 shows the effect on $\bar{z}_o$ of moving the lifting points in from the ends. The equation for $\bar{z}_o$ was obtained by integrating the shape of the deflection curve to find its centroid.

$$\bar{z}_o = \frac{w}{12EIl}\left(\frac{1}{10}l_1^5 - a^2 l_1^3 + 3a^4 l_1 + \frac{6}{5}a^5\right) \tag{8}$$

When a = 0:

$$\bar{z}_o = \frac{wl^4}{120EI} \tag{3}$$

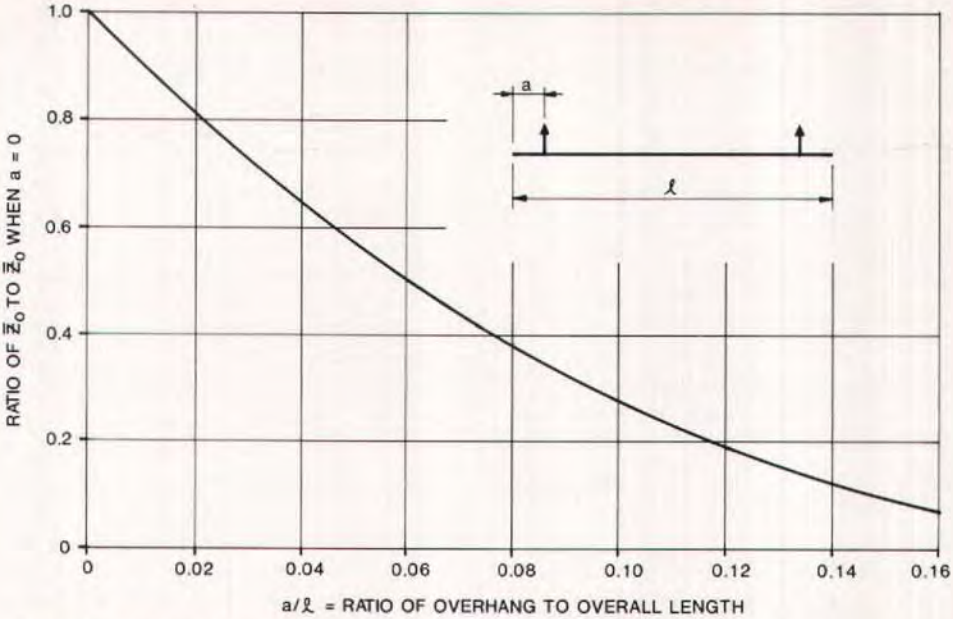

Fig. 3. Reduction of $\bar{z}_o$ with overhangs.

The slope θ_o at the support is:

$$\theta_o = \frac{w}{24EI}(l_1^3 - 6a^2 l_1) \qquad (9)$$

Note that moving the lifting points 6 percent of the span virtually halves $\bar{z}_o$ and doubles the factor of safety. Of course, one must not overdo it as the top fiber stresses should remain compressive. Fortunately, very long concrete girders normally have top compression and can tolerate being lifted a short distance from the end.

APPROXIMATE COMPUTATION OF $\bar{z}_o$

Eq. (8) may readily be used to find $\bar{z}_o$ for a uniform beam with equal overhangs. For cases that do not quite meet these conditions, an approximate procedure may be used to find $\bar{z}_o$.

1. Compute the midspan deflection β_y with the full dead weight applied laterally.
2. Assume the slope at the supports, $\theta_o = 3.2\ \beta_y/l_1$.
3. Compute the distance to the centroid of the uniform load between supports as 2/3 of β_y.
4. Compute the distance to the centroid of the overhangs, assuming the overhangs are straight, at a slope equal to θ_o.
5. Estimate the centroid of any other masses (i.e., end blocks, stub diaphragms) on the beam.
6. Combine the above components to find the $\bar{z}_o$ of the total mass of the beam.

MISCELLANEOUS EFFECTS

End blocks normally have a stabilizing effect, as their weight is close to the supports and decreases the tendency to roll. In most cases, the weight of end blocks may be safely (and conservatively by 5 to 10 percent) disregarded to the computation of $\bar{z}_o$.

Camber raises the centroid of the

mass of the beam, and thus decreases the distance y_r between the roll axis and the centroid of the mass. It is sufficiently accurate to assume the centroid of the mass is shifted upward by 2/3 of the midspan camber.

Beams are sometimes lifted using inclined cables. The critical buckling load P_{cr} is:

$$P_{cr} = \frac{\pi^2 E I_y}{l_1^2}$$

The quantity $\bar{z}_o$ will be magnified by (approximately) the quantity $(1 - P/P_{cr})$, where P is the horizontal component of the tension in the inclined cable, multiplied by a factor of safety.

HOW TO INCREASE BEAM STABILITY

1. Move the lifting points inward. This is by far the most effective means of improving lateral stability while hanging. As shown in Fig. 3, moving the lifting points a few percent of the length may more than double the factor of safety. Top stresses must be checked. Imper and Laszlo[9] have suggested using temporary post-tensioning in the top flange where necessary to control top stresses.
2. Raise the roll axis. This may be done by providing a yoke attached to the beam at the lifting point, or by using a pair of inclined lifting loops. Either method can effectively raise the roll axis (and increase y_r) by a foot or two.
3. Increase the modulus of elasticity, E. Because E varies as the square root of the concrete strength, increasing f'_c and therefore E results in only a slight improvement in lateral stability.
4. Add bracing. This commonly used method is one of the less effective methods. The quantity $\bar{z}_o$ is determined by the lateral stiffness of the member, and bracing using ½ in. (12.7 mm) strands adds very little to the lateral stiffness. Bracing using angles or other rolled sections with substantial steel area can be much more effective. Bracing can add significantly to the lateral bending strength and thus to θ_{max}. This improves safety when high θ angles are encountered, such as on superelevated curves. This will be discussed in Part 2.
5. Modify the beam cross section. This usually cannot be done on a particular project. When the beam shape can be changed, it is important to realize that the bottom flange contributes just as much to lateral stability as the top flange. In fact, adding material to the bottom flange is more beneficial because it lowers the center of gravity and increases y_r as well as I_y. Furthermore, the bottom flange is under compression and not as subject to loss of stiffness through cracking as is the top flange.

EXAMPLE

The example in Appendix B represents an extreme case. It is taken from real life. In 1963, the author designed a barrel shell roof of approximately 150 ft (45.7 m) span. The valley beam (which was actually the tension flange of the barrel shell) was a prestressed I-girder normally used on bridge spans of about 100 ft (30 m). The beam was stretched to 145 ft (44.2 m), and was heavily prestressed throughout its depth using high strength concrete. Camber was approximately zero. The beam was carefully checked by classical lateral buckling formulas and found to be satisfactory.

Lifting loops were located 135 ft (41.2 m) center to center. The first beam to be lifted was 42 hours old and was handled without incident. The second beam, 18

hours old, tilted immediately on being lifted from the form pan, and bent sideways approximately 1 ft (300 mm). The beam was immediately set down on the plant floor; fortunately, it righted itself instead of rolling over. It was straight and stable once it was resting on bunks on the floor.

The theory presented here was developed to explain what went wrong. The factor of safety against lateral bending, computed after the fact, was almost exactly 1.0. (The initial eccentricity e_i is not known for this case, but it is believed to have been quite small.) Apparently, the slight difference in E of the two beams caused one to be stable and the other to buckle.

After the lateral bending phenomenon was discovered and analyzed, the lifting loops were moved to 120 ft (36.6 m) center to center with a 12.5 ft (3.8 m) overhang at each end. The remainder of the beams were handled without incident, although the computed gross factor of safety for this condition, 1.9, is probably slightly less than desirable. (These beams were never shipped over the road; they were delivered by barge and laterally braced against the barge.)

The recomputation was done by the approximate method to demonstrate its use. In this case, it would be about as easy to use the more exact method, which gives $\bar{z}_o$ = 14.95 in. (381 mm) and FS = 2.

WHAT FACTOR OF SAFETY IS NECESSARY?

The necessary factor of safety cannot be determined from mathematical derivations; it must be determined from experience. The PCI Design Handbook suggests a factor of safety of 2, but this produces an actual gross factor of safety of about 3. The 1963 experience with the 145 ft (44.2 m) beams appeared to indicate that a gross factor of safety of 2 was adequate when the initial eccentricity e_i due to tolerances was very small. Imper and Laszlo[9] suggest using a factor of 1.5 for yard handling and 1.75 for field handling, with the factor being based on β_y. This produces gross factors of 2.3 and 2.7, respectively, based on $\bar{z}_o$.

The computation of a net factor of safety requires a knowledge of e_i and θ_{max}. The initial eccentricity e_i may be assumed, based on the worst case combination of permissible tolerances, as was done in the earlier example. However, that maximum eccentricity e_i would have caused the beam to hang at a 5.1 degree angle when first lifted, which should serve as a warning that quality control needs to be tightened in order to reduce e_i.

The determination of θ_{max} also involves some difficulties. Using a good computer program for ultimate strength in biaxial bending, the maximum lateral bending moment in combination with the vertical bending moment may be found, and thus θ_{max} at ultimate load. Unfortunately, once the lateral moment exceeds the cracking strength, the stiffness decreases and $\bar{z}_o$ increases, calculated on a cracked section.

A conservative approach is to compute θ_{max} based on the lateral moment, which, when combined with the vertical moment, produces a tension in the top corner equal to the modulus of rupture. The "right" value of θ_{max} probably lies between that computed by this approach and by the ultimate strength approach. This will be discussed in more detail in Part 2.

SUMMARY

A simple method for the analysis of the lateral stability of hanging beams has been presented. The method permits the evaluation of the effects of initial imperfections. Several methods for improving the lateral stability are suggested. In Part 2, the analytical method will be extended to the case of beams on flexible supports such as trucks and neoprene pads.

REFERENCES

1. *PCI Design Handbook*, Third Edition, Prestressed Concrete Institute, Chicago, Illinois, 1985.
2. Timoshenko, S., *Advanced Strength of Materials, Part II*, Third Edition, D. Van Nostrand, Princeton, New Jersey, 1956.
3. Roark, R. J., *Formulas for Stress and Strain*, Fourth Edition, McGraw-Hill, New York, N.Y., 1965.
4. Muller, J., "Lateral Stability of Precast Members During Handling and Placing," PCI JOURNAL, V. 7, January-February 1962, pp. 21-31.
5. Libby, J. R., *Modern Prestressed Concrete*, Second Edition, Van Nostrand Reinhold, New York, N.Y., 1977.
6. Swann, R. A., and Godden, W. G., "The Lateral Buckling of Concrete Beams Lifted by Cables," *The Structural Engineer* (London), V. 44, No. 1, January 1966, pp. 21-33.
7. Anderson, A. R., "Lateral Stability of Long Prestressed Concrete Beams," PCI JOURNAL, V. 16, No. 3, May-June 1971, pp. 7-9.
8. Swann, R. A., Reader's Comment to article on "Lateral Stability of Long Prestressed Concrete Beams," PCI JOURNAL, V. 16, No. 6, November-December 1971, pp. 85-87.
9. Imper, R. R., and Laszlo, G., "Handling and Shipping of Long Span Bridge Beams," PCI JOURNAL, V. 32, No. 6, November-December 1987, pp. 86-101.

* * *

NOTE: Discussion of this paper is invited. Please submit your comments to PCI Headquarters by October 1, 1989.

APPENDIX A — NOTATION

a = length of overhang
b = width
e_i = initial eccentricity of the center of gravity of beam
E = modulus of elasticity
FS = factor of safety against lateral instability or failure
G = shear modulus
I_y = lateral moment of inertia
K_θ = rotational spring constant of support
l = overall length
l_1 = length between supports
M = moment
M_t = torsional moment
P = axial load
P_{cr} = critical compressive buckling load
r = K_θ/W
t = thickness
w = weight of beam per unit length
W = total weight of beam
x = length
y = deflection
y_r = height of roll axis above center of gravity of beam
y_t = distance from center of gravity of cross section to top of beam
$\bar{z}$ = lateral deflection of center of gravity of beam
$\bar{z}_o$ = lateral deflection of center of gravity of beam with the full dead weight applied laterally
α = superelevation angle
β_y = midspan lateral deflection
$\Delta\theta$ = twist angle
θ = roll angle
θ_i = initial roll angle = e_i/y_r
θ_o = slope at support, when full dead load is applied laterally

* * *

APPENDIX B — EXAMPLE

Given

$l = 145$ ft; $w = 0.61$ kip/ft
End blocks are 5 ft long.
Added $w = 0.53$ kip/ft
$l_1 = 135$ ft center lifting points
$a = 5$ ft
$E \approx 5500$ ksi
$I_y = 15{,}000$ in.^{4}; $y_t = 30.1$ in.

Required

Compute $\bar{z}_o$ and the factor of safety while hanging from loops. Include effect of end blocks (see Fig. B1).

Solution

For uniform load, use Eq. (8):

$$\bar{z}_o = \frac{w}{12EIl}\left[\frac{1}{10}l_1^5 - a^2 l_1^3 + 3a^4 l_1 + \frac{6}{5}a^5\right]$$

$$= \frac{0.61 \text{ kip/ft } (4{,}422{,}781{,}000 \text{ ft}^5)(1728 \text{ in.}^3/\text{ft}^3)}{12\,(5{,}500 \text{ kip/in.}^2)(15{,}000 \text{ in.}^4)(145 \text{ ft})}$$

$$= 32.48 \text{ in.}$$

$W = 145\,(0.61) = 88.45$ kips
Moment about roll axis:
$M = \bar{z}_o W = 2872$ kip-in.

Effect of end blocks:
From Eq. (9):

$$\theta_o = \frac{w}{24EI}(l_1^3 - 6a^2 l_1)$$

$$\theta_o = \frac{0.61 \text{ kip/ft } (135^3 \text{ ft}^3 - 6.5^2 \times 135 \text{ ft}^3)}{24\,(5{,}500 \text{ kip/in.}^2)\,(15{,}000 \text{ in.}^4)} \times (144 \text{ in.}^2/\text{ft}^2)$$

$$\theta_o = 0.1083 \text{ radian}$$

$\bar{z}_o$ to cg of end blocks $= -\,\theta_o$ (l to cg of end block)

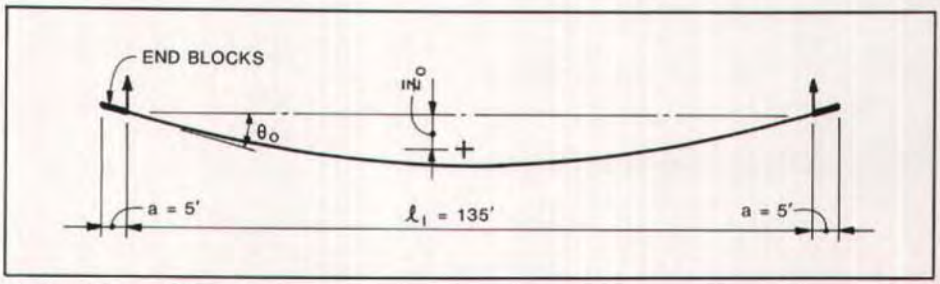

Fig. B1. Computation of $\bar{z}_o$.

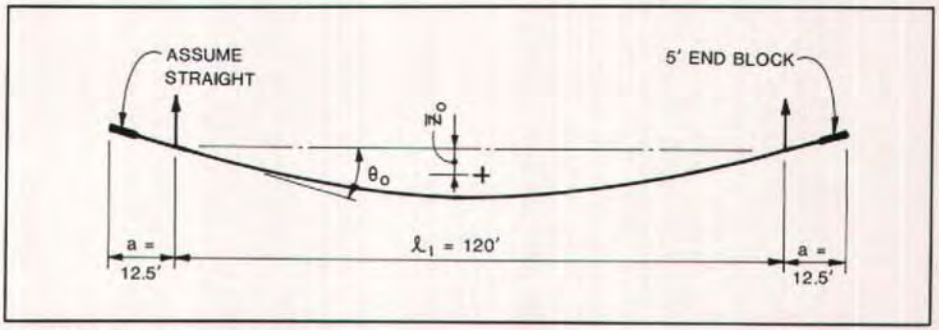

Fig. B2. Revised computation of $\bar{z}_o$.

$\bar{z}_o = -0.1083\,(2.5\text{ ft})\,(12\text{ in./ft})$

$\bar{z}_o = -3.25\text{ in.}$

$W = 2 \times 5 \times 0.53 = 5.3\text{ kips}$

M about roll axis $= \bar{z}_o W = -17$ kip-in.

For total beam:

$$\bar{z}_o = \frac{\Sigma M's}{\Sigma W's} = \frac{2872 - 17\text{ kip-in.}}{88.45 + 5.3\text{ kips}}$$
$$= 30.46\text{ in.}$$

For no camber, $y_r = y_t = 30.1$ in.

$$\text{FS} = \frac{y_r}{\bar{z}_o} = \frac{30.1}{30.46} \approx 1.0\ (!)$$

For further details, see the text.

Revise l_1 to 120 ft (a = 12.5 ft) to improve stability. Recompute $\bar{z}_o$ and FS by approximate method (see Fig. B2).

For center 120 ft:

$$\beta_y = \frac{wl_1^2}{384EI}(5l_1^2 - 24a^2)$$

$$\beta_y = \frac{0.61\text{ kip/ft}\,(120^2\text{ft}^2)\,(5 \times 120^2 - 24 \times 12.5^2)\text{ft}^2}{384\,(5500\text{ kip/in.}^2)\,(15{,}000\text{ in.}^4)} \times (1728\text{ in.}^3/\text{ft}^3)$$
$$= 32.70\text{ in.}$$

$$\bar{z}_o = \frac{2}{3}\beta_y = 21.80\text{ in.}$$

$W = 120\,(0.61) = 73.2$ kips

M about roll axis $= 73.2\,(21.80)$
$= 1596$ kip-in.

$\theta_o = 3.2\,\beta_y/l_1 = 3.2 \times 32.70/120 \times 12$

$\theta_o = 0.0727$ radian

For end 12.5 ft:

$\bar{z}_o = -\theta_o(a/2) = -0.0727\,(75\text{ in.})$
$= -5.45$ in.

$W = 2 \times 12.5 \times 0.61 = 15.25$ kips

M about roll axis $= 15.25\,(-5.45)$
$= -83$ kip-in.

For end blocks:

$\bar{z}_o = -\theta_o$ (l to cg of end block)

$\bar{z}_o = -0.0727\,(120\text{ in.}) = -8.72$ in.

$W = 5.3$ kips

M about roll axis $= -46$ kip-in.

For total beam:

$$\bar{z}_o = \frac{\Sigma M's}{\Sigma W's} = \frac{1596 - 83 - 46}{93.75}$$

$\bar{z}_o = 15.46$ in.

$$\text{FS} = \frac{y_r}{\bar{z}_o} = \frac{30.1}{15.46} = 1.94$$

For further details, see the text.

* * *

APPENDIX C — A PREVIEW OF PART 2

When a beam is supported on flexible supports such as bearing pads or truck and trailer, a similar situation occurs in which there is a tendency for the beam to roll about a roll axis. In this case, the roll center is below the beam, and y_r is negative (see Fig. C1).

When the roll axis is beneath the center of gravity, the support must be capable of providing resistance to rotation. This resistance is expressed as an elastic rotational spring constant K_θ. Taking moments about the roll axis (see Fig. C1):

$$W\,[\,(\bar{z}_o \sin\theta\cos\theta + e_i)\cos\theta - y_r \sin\theta] = K_\theta(\theta - \alpha) \qquad (10)$$

where α is the superelevation angle or slope angle of the support.

Using the approximations $\theta \approx \sin\theta \approx \tan\theta$ and $\cos\theta \approx 1$:

$$W\,(\bar{z}_o\,\theta + e_i - y_r\,\theta) = K_\theta(\theta - \alpha) \qquad (11)$$

Let $r = K_\theta/W$. The quantity r has a physical interpretation. It is the height at which the weight W could be placed to cause neutral equilibrium with the

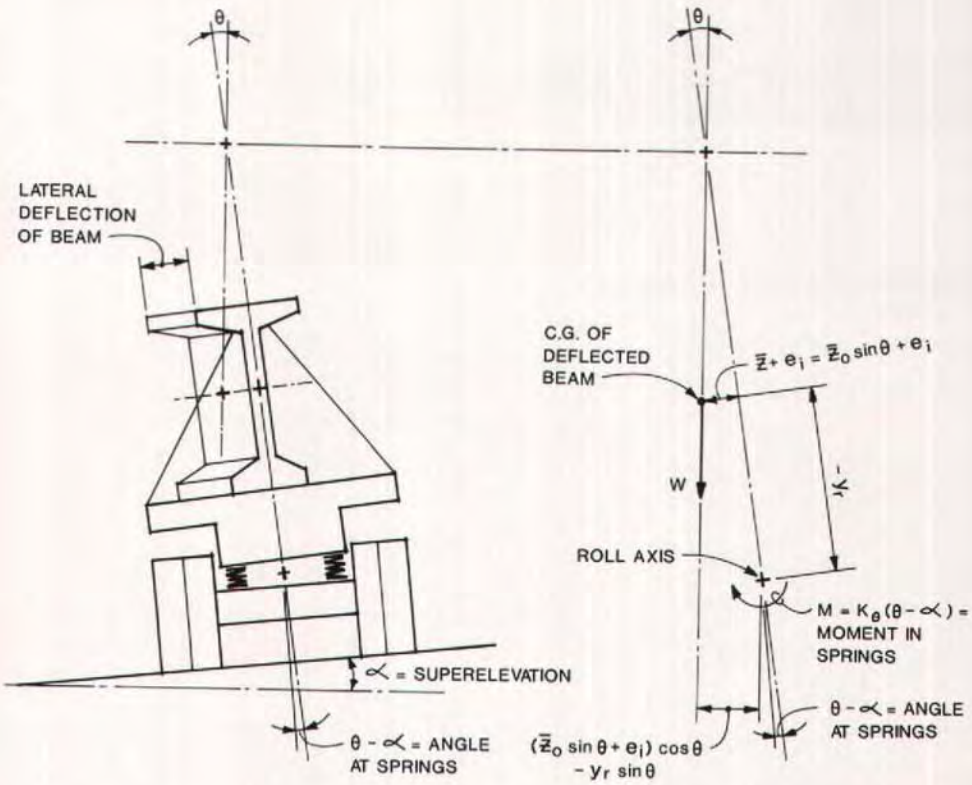

Fig. C1. Equilibrium of slender beam on flexible support.

spring (see Fig. C2). For neutral equilibrium, the overturning moment will just equal the resisting moment when the rod supporting W is displaced by a small angle. The quantity r might be called the radius of stability.

Solving Eq. (11) for θ:

$$\theta = \frac{\alpha r + e_i}{r + y_r - \bar{z}_o} \tag{12}$$

When r is very large, i.e., the support is very stiff, θ approaches α, the tilt angle of the support. When $r = 0$:

$$\theta = \frac{e_i}{y_r - \bar{z}_o}$$

This formula is identical to Eq. (5). Eq. (12) is an expanded version of Eq. (5).

The definition of θ_i, the initial roll angle of a rigid beam, may be expanded by setting $\bar{z}_o$ equal to zero in Eq. (12):

$$\theta_i = \frac{\alpha r + e_i}{r + y_r} \tag{13}$$

Expanded versions of Eqs. (1) and (2) may be derived from Eq. (11) as follows, with θ_i as defined in Eq. (13):

$$\text{FS} = \frac{r + y_r}{\bar{z}_o}\left(1 - \frac{\theta_i}{\theta_{max}}\right) \tag{14}$$

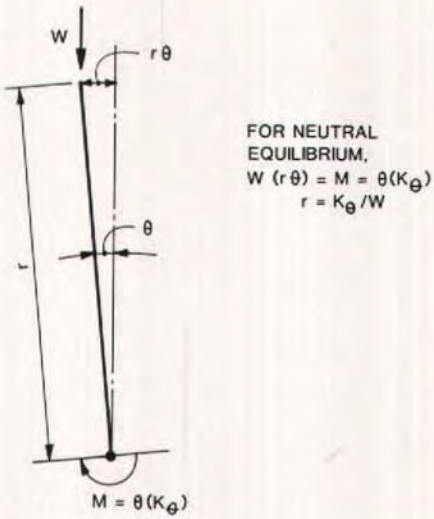

Fig. C2. Definition of r.

$$\text{FS} = \frac{\theta_{max}}{\theta_i}\left(1 - \frac{\bar{z}_o}{r + y_r}\right) \tag{15}$$

Part 2 will give the derivation of Eqs. (14) and (15) and describe their use. This requires the determination of K_θ and r, the location of the roll axis, and the determination of θ_{max}.

* * *

APPENDIX D — SIMPLE BASIC PROGRAM

A simple BASIC program is shown (Fig. D1) which allows one to quickly evaluate the effect on the factor of safety created by varying the "A" distance. The program computes the factor of safety against cracking of the top flange. The factor of safety against failure may be considerably higher, but the computation of θ_{max} and $\bar{z}_o$ at failure is a more complex problem.

The logic of the program is very straightforward. The user may readily alter the program to suit his/her needs. A few of the lines in the program are explained as follows:

Line 100 "A" is the distance from the end of the beam to the lifting point.

Line 110 The initial eccentricity e_i is estimated at one half the PCI sweep tolerance plus ¼ in. for lifting loop placement. The user may wish to modify this statement, to reflect his experience with actual tolerances. The actual initial eccentricities being experienced may be evaluated by finding the values of e_i which produce the tilt angles θ actually being observed while beams are hanging.

Line 120 Eq. (8).

Line 140 Assumes maximum lateral moment is that which produces tension equal to the modulus of rupture in the top corner of the top flange.

Line 160 Estimate of camber.

Line 170 $\theta_i = e_i/y_r$.

Line 175 Eq. (5).

Line 190 Eq. (1).

Line 195 Eq. (2).

Line 300 Allows one to revise "A" distance without re-entering other data.

Line 320 Allows one to change e_i.

This program often produces quite low factors of safety because the computed factor of safety is that against cracking. In most cases, the factor of safety against failure will be higher. Additional data from the field are needed to find θ_{max} at failure or, conversely, what factor of safety against cracking is adequate. Part 2 will discuss θ_{max} at failure in more detail.

* * *

```
1     !  PROGRAM ROLL
      INPUT "AREA, SQ IN";AC
      INPUT "DEPTH, IN";D
      INPUT "YT, IN";YT
      INPUT "VERTICAL MOMENT OF INERTIA, IN^4";I
      INPUT "TOP FLANGE WIDTH, IN";B
      INPUT "LATERAL MOMENT OF INERTIA, IN^4";IY
      INPUT "OVERALL LENGTH, FT";L
      INPUT "CONCRETE STRENGTH, PSI"; FCP
      INPUT "CONCRETE DENSITY, PCF";GAMMA
      INPUT "PRESTRESS FORCE, KIPS";P
      INPUT "HEIGHT OF PRESTRESS FORCE ABOVE SOFFIT AT MIDSPAN, IN";YS
80    E=33*GAMMA^1.5*SQR(FCP)/1000
85    W=AC*GAMMA/144/1000
90    ST=I/YT
95    ECC=D-YS-YT
100   INPUT "A DISTANCE, FT";A
105   L1=L-2*A
110   EIN=L1/10*.125/2+1/4
120   ZZEROBAR=W/(12*E*IY*L)*(L1^5/10-A^2*L1^3+3*A^4*L1+6*A^5/5)*1728
125   MG=W*(L1^2/8-A^2/2)*12
130   FTOP=P/AC+(-P*ECC+MG)/ST
140   MLAT=(7.5*SQR(FCP)/1000+FTOP)*IY/(B/2)
150   THETAMAX=MLAT/MG
160   CAMBER=(0.11*P*ECC-5/48*MG)*L1^2/(E*I)*144*1.85
165   YR=YT-2/3*CAMBER
170   THETAIN=EIN/YR
175   THETA=EIN/(YR-ZZEROBAR)
190   FS1=YR/ZZEROBAR*(1-THETAIN/THETAMAX)
195   FS2=THETAMAX/THETAIN*(1-ZZEROBAR/YR)
200   PRINT
      PRINT "CAMBER = ";CAMBER
      PRINT "INITIAL ECCENTRICITY = ";EIN
      PRINT "ZZEROBAR = ";ZZEROBAR
      PRINT "MG     = ";MG
      PRINT "MAX M LAT = ";MLAT
      PRINT "THETA INITIAL = ";THETAIN*180/PI
      PRINT "THETA         = ";THETA*180/PI
      PRINT "THETA MAXIMUM = ";THETAMAX*180/PI
      PRINT "F. S.  EQ #1 = ";FS1
      PRINT "F. S.  EQ #2 = ";FS2
      PRINT "THE ABOVE FACTORS OF SAFETY ARE AGAINST CRACKING OF
            TOP FLANGE"
      PRINT "THE FACTOR OF SAFETY AGAINST FAILURE MAY BE HIGHER"
      PRINT
300   INPUT "NEW  'A'  DISTANCE?  Y OR N";A$
      IF A$="Y" THEN
         GOTO 100
      END IF
320   INPUT "REVISE INITIAL ECCENTRICITY?  Y OR N";E$
      IF E$="Y" THEN
         INPUT "INITIAL ECCENTRICITY, IN";EIN
         GOTO 120
      END IF
9999  STOP
32767 END
```

Fig. D1. Simple BASIC computer program.

APPENDIX E — TORSIONAL STIFFNESS

Examine the validity of the assumption of torsional rigidity by analyzing the beam described in Appendix B of Ref. 9. The beam is a PCI BT-72 on a span of 136 ft. Assume it to be tilted on an 8 percent slope. The end reaction is 56.1 kips, which produces a torsional moment M_t of 159 kip-in. when tilted on an 8 percent slope. The torsional constant, $\Sigma bt^3/3$, is estimated by idealizing the beam as four rectangles (see Fig. E1).

$$
\begin{aligned}
26(8.25)^3/3 &= 4{,}866 \text{ in.}^3 \\
63.75(6)^3/3 &= 4{,}590 \\
2(18)(4.5)^3/3 &= \underline{1{,}094} \\
\Sigma bt^3/3 &= 10{,}550 \text{ in.}^3
\end{aligned}
$$

Assume the shear modulus, G, to be 2000 ksi. The torsion is maximum at the end, varying to zero at midspan, over a length of 68 ft. The twist, $\Delta\theta$, between end and midspan is:

$$\Delta\theta = \frac{M_t x/2}{G\ \Sigma bt^3/3}$$

$$= \frac{159(68)(12)/2}{2000(10{,}550)}$$

$$\Delta\theta = 0.0037 \text{ radians} = 0.18 \text{ degrees}$$

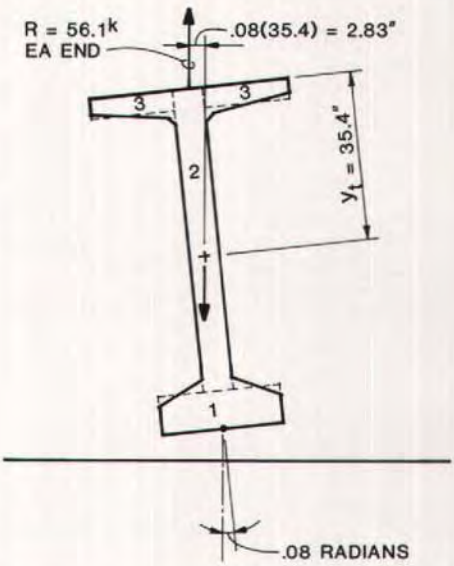

Fig. E1. PCI BT-72 beam on 8 percent slope.

This is small in comparison to other uncertainties such as fabrication tolerances, and the beam may be assumed to be torsionally rigid.

* * *

APPENDIX F — DERIVATION OF EQUATION FOR $\bar{z}_o$

The quantity $\bar{z}_o$ is the deflection of the center of mass of the deflected shape of the beam, with the self weight applied laterally. The quantity $\bar{z}_o$ may be found by integrating the deflected shape of the beam.

$$\bar{z}_o = \frac{\int_o^l y\,dx}{l}$$

The equation for the deflected shape of a beam without overhangs may be derived from the deflection equations given on p. 5-15 of the PCI Design Handbook.[1] Alternately, the formula can be found from a standard structural design manual.

$$y = \frac{w}{24EI_y}(x^4 - 2lx^3 + l^3x)$$

$$\int_o^l y\,dx = \frac{w}{24EI_y}\left|\frac{x^5}{5} - \frac{lx^4}{2} + \frac{l^3x^2}{2}\right|_o^l$$

$$= \frac{wl^5}{120EI_y}$$

Therefore, $$\bar{z}_o = \frac{wl^4}{120EI_y} \qquad (3)$$

Similarly, the equations for the deflection curve of overhanging beams given on p. 5-15 of the PCI Design Handbook may be integrated to produce Eqs. (8) and (9).

* * *

METRIC (SI) CONVERSIONS

1 ft = 0.3048 m	1 kip = 4.45 kN
1 in. = 25.4 mm	1 kip-in. = 0.113 kN-m